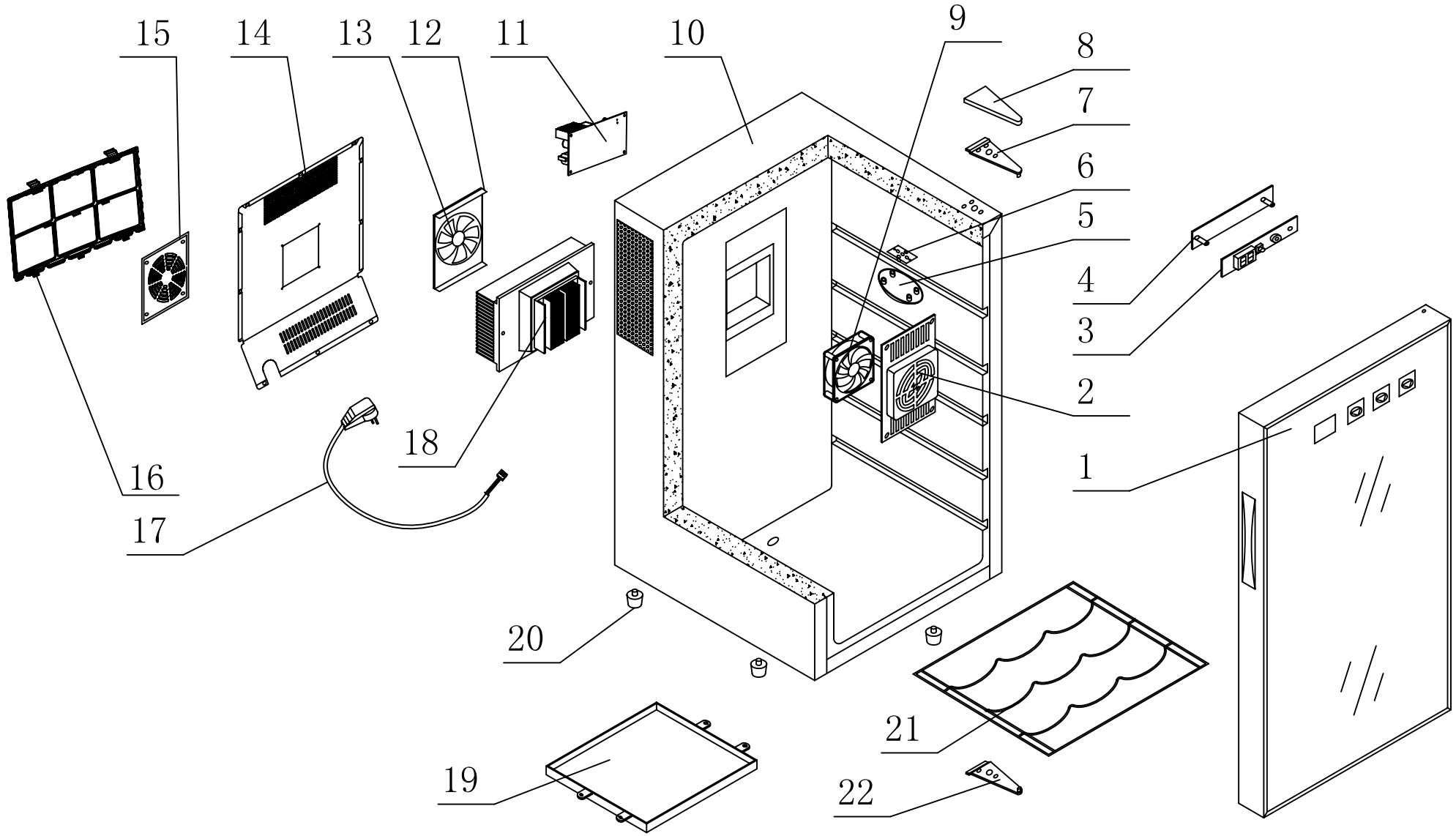

1. Door
2. Cool Fan Bracket
3. Temperature Control Board
4. Tem Control Bracket
5. Lamp Cover
6. Lamp Board
7. Upper Door Hinge
8. Hinge Cover
9. Cool Fan
10. Cabinet
11. Power Board
12. Heat Fan Bracket
13. Heat Fan
14. Back Cover
15. Anti-dust Net
16. Air Filter
17. Power Cord
18. Cooling System
19. Water Tray
20. Foot
21. Shelf
22. Down Door Hinge

EXPLODED VIEW	FUXIN
	JC-48BFW